Appendix

Groups of materials according to EN Standards

Standards **Table I.1.1**

EN standard	Name	Material No.	Group No.
10025	S235JR	1.0037	1E0
10025	S235JRG2	1.0038	1E1
10028-2	P265GH	1.0425	3E0
10028-2	P295GH	1.0481	3E1
10028-2	16Mo3	1.5415	4E0
10028-2	13CrMo4-5	1.7335	5E0
10028-2	10CrMo9-10	1.7380	6E0
10213-2	GP240GR	1.0621	2E0
10213-2	GP240GH	1.0619	3E0
10213-2	G20Mo5	1.5419	4E0
10213-2	G17CrMo5-5	1.7357	5E0
10213-2	G17CrMo9-10	1.7379	6E0
10213-2	GX15CrMo5	1.7365	6E1
10213-3	G17Mn5	1.1131	7E0
10222-2	P245GH	1.0352	3E0
10222-2	P280GH	1.0487	3E1
10222-2	16Mo3	1.5415	4E0
10222-2	13CrMo4-5	1.7335	5E0
10222-2	11CrMo9-10	1.7383	6E0
10222-2	X16CrMo5-1	1.7366	6E1
10222-5	X5CrNi18-10	1.4301	11E0
10222-5	X5CrNiMo17-12-2	1.4401	14E0
10222-5	X6CrNiMoTi17-12-2	1.4571	15E0
10222-5	X10CrMoVNb9-1	1.4903	1C15
10213-4	GX5CrNi19-10	1.4308	11E0
10213-4	GX5CrNiNb19-11	1.4552	12E0
10213-4	GX5CrNiMo19-11-2	1.4408	14E0

Additional materials

According to EN 1092-1, Annex D following materials can be used:

Table D.1: Additional materials **Table I.1.2**

Name	Material No.	Group No.
C21 [1)]	1.0432	1E0
C22.8 [2)]	1.0460	3E0

[1)] according to DIN 2528 [2)] according DIN 17243

Groups of materials according to ASTM Standards

List of materials according to ASTM Standards **Table I.1.3**

Material groups		Product forms								
Material Group No.	Nominal Designation	Forgins			Castings			Plates		
		Spec.Br.	Grade	Notes	Spec.Br.	Grade	Notes	Spec.Br.	Grade	Notes
1.1	C-Si	A 105	-	(1) (2)	A 216	WCB	(1)	A 515	70	(1)
	C-Mn-Si	A 350	LF2	(1)	-	-	-	A 516	70	(1)(3)
1.2	C-Mn-Si	-	-	-	A 216	WCC	(5)	-	-	-
		-	-	-	A 352	LCC	(4)	-	-	-
	2½ Ni	-	-	-	A 352	LC2	(4)	A 203	B	(5)
1.3	C-Si	-	-	-	A 352	LCB	(4)	A 515	65	(1)
	C-½ Mo	-	-	-	A 217	WC1	(6) (7)	-	-	-
		-	-	-	A 352	LC1	(4)	-	-	-
1.4	C-Si	-	-	-	-	-	-	A 515	60	(1)(3)
1.5	C-½ Mo	A 182	F1	(6)	-	-	-	A 204	A	(6)
1.7	½ Cr - ½ Mo	A 182	F2	(8)	-	-	-	-	-	-
	Ni-½ Cr-½ Mo	-	-	-	A 217	WC4	(8) (7)	-	-	-
	¾ Ni-Mo- ¾ Cr	-	-	-	A 217	WC5	(7)	-	-	-
1.9	1 Cr- ½ Mo	A 182	F11 Cl.2	(7) (9)	-	-	-	A 387	11 Cl. 2	(9)
	1¼Cr-½ Mo	-	-	-	A 217	WC6	(7) (10)	-	-	-
1.10	2 ¼ Cr-1 Mo	A 182	F22 Cl.3	(9)	A 217	WC9	(7) (10)	A 387	22 Cl. 2	(9)
1.13	5Cr-½ Mo	A 182	F5a	-	A 217	C5	(7)	-	-	-
2.1	18Cr-8Ni	A 182	F304	(12)	A 351	CF3	(11)	A 240	304	(12)
		A 182	F304H	-	A 351	CF8	(12)	A 240	304H	-
2.2	16Cr-12Ni-2Mo	A 182	F316	(12)	A 351	CF3M	(3)	A 240	316	(12)
		A 182	F316H	-	A 351	CF8M	(12)	A 240	316H	-
	18Cr-13Ni-3Mo	A 182	F317	(12)	-	-	-	A 240	317	(12)
		A 182	F317H	-	A 351	CF8A	(8)	A 240	317H	-
2.3	18Cr-8Ni	A 182	F304L	(11)	-	-	-	A 240	304L	(11)
	16Cr-12Ni-2Mo	A 182	F316L	-	-	-	-	A 240	316L	-
2.4	18Cr-10Ni-Ti	A 182	F321	(8)	-	-	-	A 240	321	(8)
		A 182	F321H	(13)	-	-	-	A 240	321H	(13)
2.5	18Cr-10Ni-Cb	A 182	F347	(8)	-	-	-	A 240	347	(8)
		A 182	F347H	(13)	-	-	-	A 240	347H	(13)
2.11	18Cr-10Ni-Cb	-	-	-	A 351	CF8C	(12)	-	-	-

NOTES:

1. Upon prolonged exposure to temperature above about 425°C, the carbide phase of carbon steel may be converted to graphite.
2. Only killed steel shall be used above 455°C.
3. Not to be used over 455°C.
4. Not to be used over 345°C.
5. Upon prolonged exposure to temperature above about 455°C, the carbide phase of carbon steel may be converted to graphite. Permissible, but not recommended for prolonged usage above 425°C.
6. Upon prolonged exposure to temperature above about 470°C, the carbide phase of steel of carbon-molibdenum steel may be converted to graphite. Permissible, but not recommended for prolonged usage above 470°C
7. Use normalized and tempered material only.
8. Not to be used over 538°C.
9. Permissible, but not recommended for prolonged usage above 595°C.
10. Not to be used over 595°C.
11. Not to be used over 425°C.
12. At temperatures over 538°C, use only when the carbon content is 0,04% or higher.
13. For temperatures over 538°C, use only if the material is heat treated by heating it to a temperature of at least 1095°C and quenching in water or rapidly cooling by other means.

Flange facing dimensions according to EN 1092-1

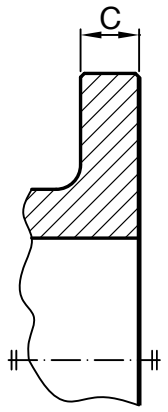

Drawing I.1.1 - Type A
Flat face

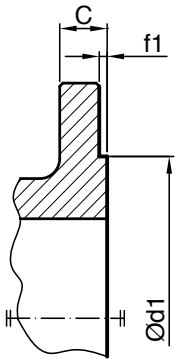

Drawing I.1.2 - Type B
Raised face (B1 i B2)

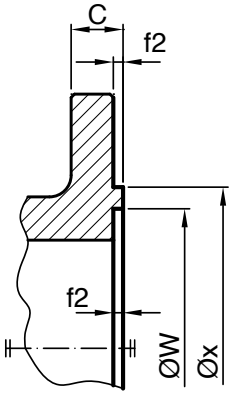

Drawing I.1.3 - Type C
Tongue face

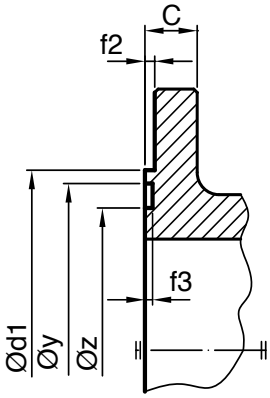

Drawing I.1.4 - Type D
Groove face

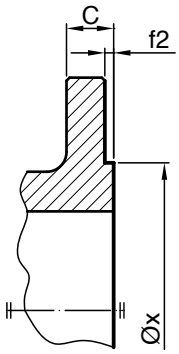

Drawing I.1.5 - Type E
Spigot

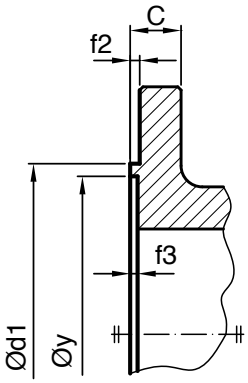

Drawing I.1.6 - Type F
Recess

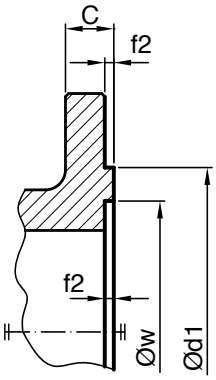

Drawing I.1.7 - Type G
O Ring recess

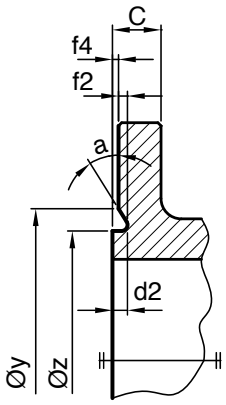

Drawing I.1.8 - Type H
O Ring groove

Dimensions (mm) **Table I.1.4**

DN	PN 25	PN 40	PN 63	PN 100 (160)	f_1	f_2	f_3	f_4	w	x	y	z	a	d_2
	d_1													
	⇹ (mm)													
10	Use PN 100 dimensions			40	2	4,5	4	2	24	34	35	23		5
15				45					29	39	40	28		
20				58					36	50	51	35	41 °	
25				68					43	57	58	42		
32				78					51	65	66	50		
40				88					61	75	76	60		
50				102					73	87	88	72		
65				122					95	109	110	94		
80				138					106	120	121	105		
100	162	162	162	162		5	4,5	2,5	129	149	150	128	32 °	6
125	188	188	188	188					155	175	176	154		
150	218	218	218	218					183	203	204	182		
200	278	285	285	285					239	259	260	238		
250	335	345	345	345					292	312	313	291		
300	395	410	410	410					343	363	364	342		
350	450	465	465	465		5,5	5	3	395	421	422	394	27 °	7

*For PN 160 flanges form can be only B2, C and D

DOO TERMOVENT SC I Industrijska zona bb I 21235 Temerin I Srbija / Serbia
Tel: ++ 381 21 842-505, 842-911 I Fax: ++ 381 21 843-238
e-mail: office@termoventsc.rs
www.termoventsc.rs

Butt Welding End according to EN 12627

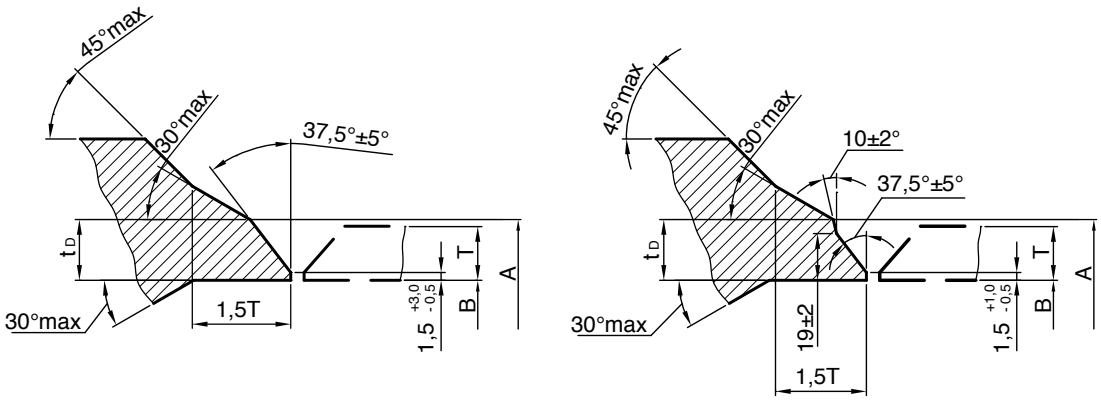

4 mm < T ≤ 22 mm

T > 22 mm

Drawing I.1.9 - The form of the end for butt welding

Table I.1.5

- ø A	- outside diameter of the Valve butt welding end
- ø B	- inside diameter of the pipe
- T	- wall thickness of the pipe
- t_D	≤ 1,5 * T

Dimensions (mm)

DN (nominal size)	**15**	**20**	**25**	**32**	**40**	**50**	**65**	**80**	**100**	**125**	**150**	**200**	**250**	**300**	**350**
øA (mm)	22	28	35	44	50	62	77	91	117	144	172	223	278	329	362

Butt Welding End according to DIN 3239 T1

Dimensions (mm) **Table I.1.6**

Nominal size DN		row 1 (more than PN40)	row 2 (PN63)	row 3 (PN100)	row 4 (PN160)	row 5 (PN250)	row 6 (PN320)	row 7 (PN400)	row 8 (PN630)
10	d1	Use row 4			20	Use row 6	20	20	24
	d2				18 (17,2)		18 (17,2)	18 (17,2)	22 (21,3)
	d3				13		12	10	11
	d4				10		10	8	9
15	d1	Use row 4			24	24	24	31	35
	d2				22 (21,3)	22 (21,3)	22 (21,3)	28 (26,9)	32 (30)
	d3				17	16	15	17	16
	d4				15	14	13	15	14
20	d1	31	---	---	---	---	---	---	---
	d2	28 (26,9)	---	---	---	---	---	---	---
	d3	22	---	---	---	---	---	---	---
	d4	20	---	---	---	---	---	---	---
25	d1	Use row 3		37	37	39	39	48	52
	d2			34 (33,7)	34 (33,7)	35 (33,7)	35 (33,7)	44 (42,4)	47 (44,5)
	d3			28	27	27	24	28	24
	d4			25	25	25	22	25	22
40	d1	Use row 3		54	54	54	54	67	72
	d2			49 (48,3)	49 (48,3)	49 (48,3)	49 (48.3)	61 (60.3)	66 (63,5)
	d3			43	41	38	35	39	34
	d4			40	39	36	33	37	32
50	d1	Use row 3		67	67	67	71	83	92
	d2			61 (60,3)	61 (60,3)	61 (60,3)	65 (63,5)	77 (76,1)	86 (82,5)
	d3			54	52	47	47	49	46
	d4			50	50	45	45	47	44
65	d1	Use row 3		83	83	83	96	110	---
	d2			77 (76,1)	77 (76,1)	77 (76,1)	90 (88,9)	104 (101,6)	---
	d3			70	65	59	65	68	---
	d4			65	63	57	63	65	---
80	d1	Use row 3		96	96	110	110	122	---
	d2			90 (88,9)	90 (88,9)	104 (101,6)	104 (101,6)	116 (114,3)	---
	d3			82	76	79	76	76	---
	d4			80	74	77	74	74	---
100	d1	Use row 3		121	121	135	141	149	---
	d2			115(114,3)	115(114,3)	129 (127)	135 (133)	143 (139,7)	---
	d3			106	97	97	99	93	---
	d4			100	95	95	97	91	---
125	d1	Use row 2	147	147	147	161	178	204	---
	d2		141 (139,7)	141 (139,7)	141 (139,7)	155 (152,4)	172 (168,3)	198 (193,7)	---
	d3		131	129	118	119	126	130	---
	d4		125	125	116	117	124	125	---
150	d1	Use row 2	176	176	176	187	204	230	---
	d2		170 (168,3)	170 (168,3)	170 (168,3)	181 (177,8)	198 (193,7)	224 (219,1)	---
	d3		159	157	141	141	141	144	---
	d4		150	150	139	139	139	142	---
200	d1	Use row 2	228	228	228	254	254	283	---
	d2		222 (219,1)	222 (219,1)	222 (219,1)	248 (244,5)	248 (244,5)	277 (273)	---
	d3		207	205	185	191	180	187	---
	d4		200	200	183	189	178	185	---
250	d1	282	282	282	282	309	334	---	---
	d2	276 (273)	276 (273)	276 (273)	276 (273)	303 (298,5)	328 (313,9)	---	---
	d3	260	258	256	230	231	238	---	---
	d4	250	250	250	228	229	236	---	---
300	d1	331	331	331	334				
	d2	325 (323,9)	325 (323,9)	325 (323,9)	328 (323,9)				
	d3	309	302	296	277				
	d4	300	300	292	275				
350	d1	365	365	365	---				
	d2	359 (355,6)	356 (355,6)	359 (355,6)	---				
	d3	338	330	323	---				
	d4	330	330	320	---				
400	d1	417	417	417	---				
	d2	411 (406,4)	411(406,4)	411 (406,4)	---				
	d3	390	380	374	---				
	d4	375	375	366	---				
500	d1	518	518	518	---				
	d2	512 (508)	512 (508)	512 (508)	---				
	d3	480	475	470	---				
	d4	472	472	458	---				

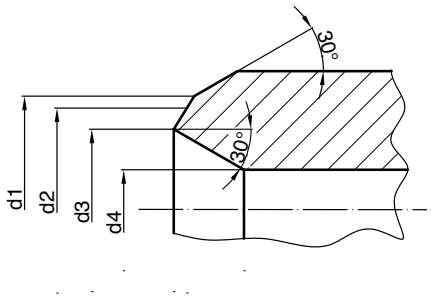

Drawing I.1.10 The form of the end for butt welding

Flange facing dimensions according to ASME/ANSI B16.5

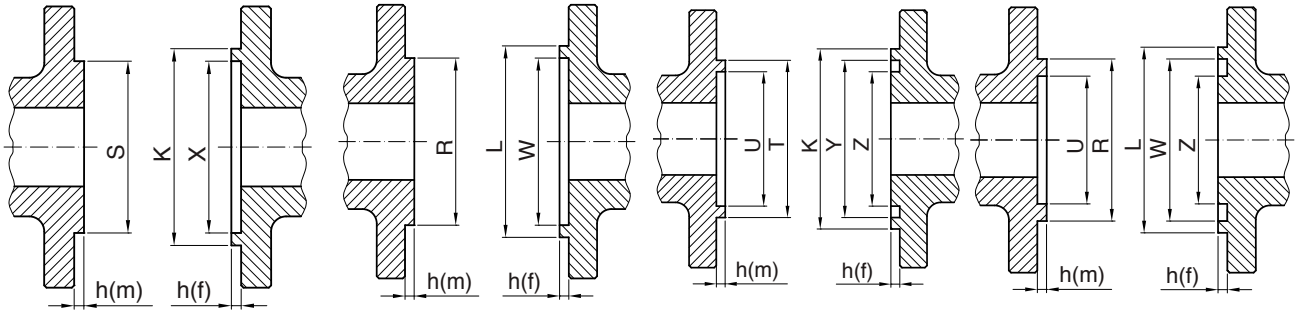

Drawing I.1.11
Small Male Face /
Small Female Face
SMF / SFF

Drawing I.1.12
Large Male Face /
Large Female Face
LMF / LFF

Drawing I.1.13
Small Tongue Face /
Small Groove Face
STF / SGF

Drawing I.1.14
Large Tongue Face /
Large Groove Face
LTF / LGF

Dimensions (mm) **Table I.1.7**

1	2	3	4	5	6	7	8	9	10	11	12	13
DN (NPS)	Outside diameter			Inside diameter	Outside diameter			Inside diameter	Outside diameter (min.)		Height	Depth
	RF, LMF and LTF	SMF	STF	LTF and STF	LFF and LGF	SFF	SGF	LGF and SG	SFF and SGF	LFF and LGF	Class 150 up to Class 2500	
	R	**S**	**T**	**U**	**W**	**X**	**Y**	**Z**	**K**	**L**	**h(m)**	**h(f)**
15(1/2)	34,9	18,3	35,1	25,4	36,5	19,9	36,5	23,8	44	46	7	5
20(3/4)	42,9	23,8	42,9	33,3	44,4	25,4	44,4	31,8	52	54	7	5
25(1)	50,8	30,2	47,8	38,1	52,4	31,8	49,2	36,5	57	62	7	5
32(1 ¼)	63,5	38,1	57,2	47,6	65,1	39,7	58,7	46,0	67	75	7	5
40(1 ½)	73,0	44,4	63,5	54,0	74,6	46,0	65,1	52,4	73	84	7	5
50(2)	92,1	57,2	82,6	73,0	93,7	58,8	84,1	71,4	92	103	7	5
65(2 ½)	104,8	68,3	95,2	85,7	106,4	69,8	96,8	84,1	105	116	7	5
80(3)	127,0	84,1	117,5	108,0	128,6	85,7	119,1	106,4	127	138	7	5
100(4)	157,2	109,5	144,5	131,8	158,8	111,1	146,0	130,2	157	168	7	5
125(5)	185,7	136,5	173,0	160,3	187,3	138,1	174,6	158,8	186	197	7	5
150(6)	215,9	161,9	203,2	190,5	217,5	163,5	204,8	188,9	216	227	7	5
200(8)	269,9	212,7	254,0	238,1	271,5	214,3	255,6	236,5	270	281	7	5
250(10)	323,8	266,7	304,8	285,8	325,4	268,3	306,4	284,2	324	335	7	5
300(12)	381,0	317,5	362,0	342,9	382,6	319,1	363,5	341,3	381	392	7	5
350(14)	412,8	349,2	393,7	374,6	414,3	350,8	395,3	373,1	413	424	7	5
400(16)	469,9	400,0	447,5	425,4	471,5	401,6	449,3	423,9	470	481	7	5
450(18)	533,4	450,8	511,2	489,0	535,0	452,4	512,8	487,4	533	544	7	5
500(20)	584,2	501,6	558,8	533,4	585,8	503,2	560,4	531,8	584	595	7	5
600(24)	692,2	603,2	666,8	641,4	693,7	604,8	668,3	639,8	692	703	7	5

NOTE: RF-Raised face for Class 150 and Class 300 is 2mm, for other classes of pressure is 7mm.

Butt Welding End according to ASME/ANSI B16.25

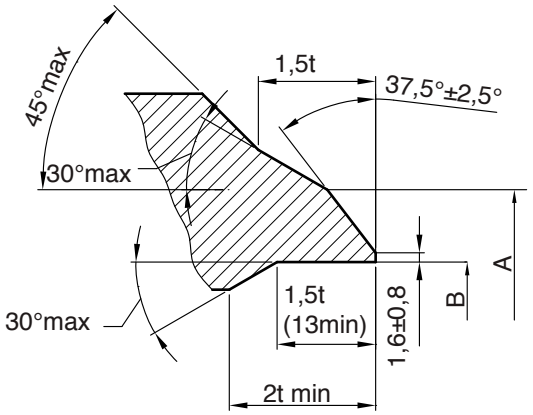

3 mm < t ≤ 22 mm

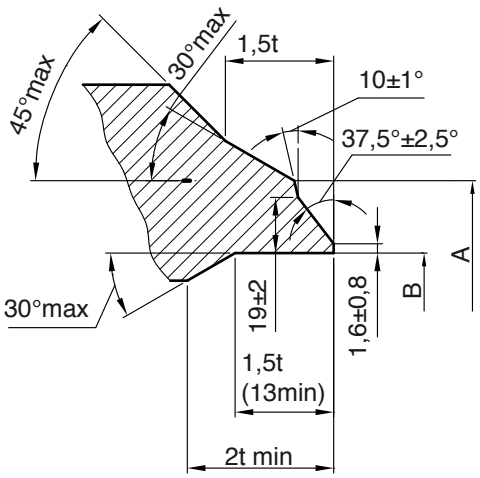

t > 22 mm

Drawing I.1.15 form of the end for butt welding

Dimensions (mm) **Table I.1.8**

DN (NPS)	Outside diameter	A	Wall thickness											
			Sch. 20	Sch. 30	Sch. Std	Sch. 40	Sch. 60	Sch. XS	Sch. 80	Sch. 100	Sch. 120	Sch. 140	Sch. 160	Sch. XXS
6(1/8)	10,3	---	---	---	1,73	1,73	---	2,41	2,41	---	---	---	---	---
8(1/4)	13,7	---	---	---	2,24	2,24	---	3,02	3,02	---	---	---	---	---
10(3/8)	17,1	---	---	---	2,31	2,31	---	3,20	3,2	---	---	---	---	---
15(1/2)	21,3	---	---	---	2,77	2,77	---	3,73	3,73	---	---	---	4,78	7,47
20(3/4)	26,6	---	---	---	2,87	2,87	---	3,91	3,91	---	---	---	5,56	7,82
25(1)	33,4	---	---	---	3,38	3,38	---	4,55	4,54	---	---	---	6,35	9,09
32(1 ¼)	42,2	---	---	---	3,56	3,55	---	4,85	4,85	---	---	---	6,35	9,70
40(1 ½)	48,3	---	---	---	3,68	3,68	---	5,08	5,08	---	---	---	7,14	10,16
50(2)	60,3	---	---	---	3,91	3,91	---	5,54	5,53	---	---	---	8,74	11,07
65(2 ½)	73,0	75	---	---	5,16	5,16	---	7,01	7,01	---	---	---	9,52	14,02
80(3)	88,9	91	---	---	5,49	5,49	---	7,62	7,62	---	---	---	11,13	15,24
100(4)	114,3	117	---	---	6,02	6,02	---	8,56	8,55	---	11,13	---	13,49	17,12
125(5)	141,3	144	---	---	6,55	6,55	---	9,52	9,52	---	12,7	---	15,88	19,05
150(6)	168,3	172	---	---	7,11	7,11	---	10,97	10,97	---	14,27	---	18,26	21,95
200(8)	219,1	223	6,35	7,04	8,18	8,18	10,31	12,70	12,7	15,09	18,26	20,62	23,01	22,22
250(10)	273,0	278	6,35	7,8	9,27	9,27	12,7	12,70	15,08	18,26	21,44	25,4	28,58	25,40
300(12)	323,8	329	6,35	8,38	9,52	10,31	14,27	12,70	17,47	21,44	25,4	28,57	33,32	---
350(14)	355,6	362	7,92	9,52	9,52	11,12	15,08	12,70	19,05	23,83	27,76	31,75	35,71	---
400(16)	406,4	413	7,92	9,52	9,52	12,7	16,66	12,70	21,43	26,19	30,94	36,52	40,46	---
450(18)	457,2	464	7,92	11,13	9,52	14,27	19,05	12,70	23,82	29,36	34,92	39,67	45,24	---
500(20)	508,0	516	9,52	12,7	9,52	15,08	20,62	12,70	26,18	32,54	38,1	44,45	49,99	---
600(24)	609,6	619	9,52	14,27	9,52	17,47	24,61	12,70	30,96	38,89	46,02	52,37	59,51	---

Socket Welding Ends according to ASME/ANSI B16.11

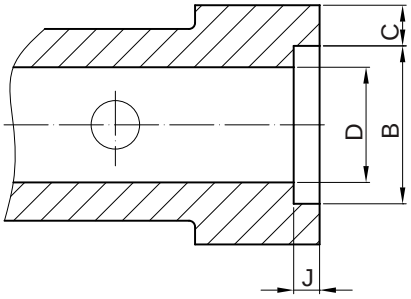

Drawing I.1.16 The form of the end for socket welding

Dimensions (mm) **Table I.1.9**

DN (NPS)	B (mm)	J (min)	Class 3000 Sch. 80		Class 6000 Sch. 160		Class 9000 Sch. XXS	
			C (min)	D (min)	C (min)	D (min)	C (min)	D (min)
6(1/8)	10,8	9,5	3,18	6,1	3,43	3,2	---	---
8(1/4)	14,2	9,5	3,30	8,5	4,01	5,6	---	---
10(3/8)	17,6	9,5	3,5	11,8	4,37	8,4	---	---
15(1/2)	21,8	9,5	4,09	15	5,18	11	5,94	5,6
20(3/4)	27,2	12,5	4,27	20,2	6,04	14,8	6,93	10,3
25(1)	33,9	12,5	4,98	25,9	6,93	19,9	7,95	14,2
32(1 ¼)	42,7	12,5	5,28	34,3	9,93	28,7	7,95	22
40(1 ½)	48,8	12,5	5,54	40,1	7,8	33,2	8,91	27,2
50(2)	61,2	16	6,04	51,7	9,5	42,1	10,89	37,4
65(2 ½)	73,9	16	7,67	61,2	---	---	---	---
80(3)	89,8	16	8,3	76,4	---	---	---	---
100(4)	115,2	16	9,35	100,7	---	---	---	---

Dimensions of the threaded NPT according to ASME/ANSI B1.20.1

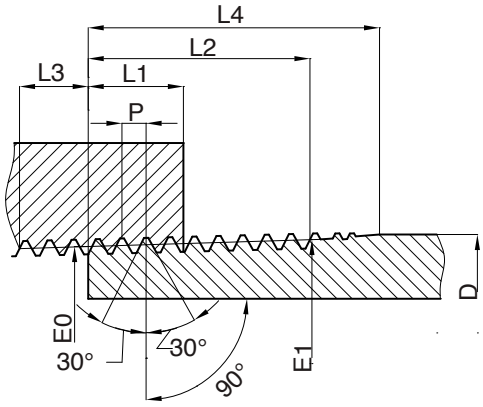

Drawing I.1.17 Thread detail

Dimensions (mm) **Table I.1.10**

NPS	D	P	L1	L2	L3	L4	E0
1/8	10,29	0,94	4,572	6,703	2,822	9,967	9,233
1/4	13,72	1,412	5,08	10,206	4,234	15,103	12,126
3/8	17,14	1,412	6,896	10,358	4,234	15,255	15,545
1/2	21,34	1,814	8,128	13,556	5,443	19,85	19.263
3/4	26,67	1,814	8,611	13,861	5,443	20,155	24,58
1	33,4	2,21	10,16	17,343	6,627	20,006	30,825
1 ¼	42,16	2,21	10,668	17,953	6,627	25,616	39,55
1 ½	48,26	2,21	10,668	18,377	6,627	26,04	45,621
2	60,32	2,21	11,074	19,251	6,627	26.878	57,633